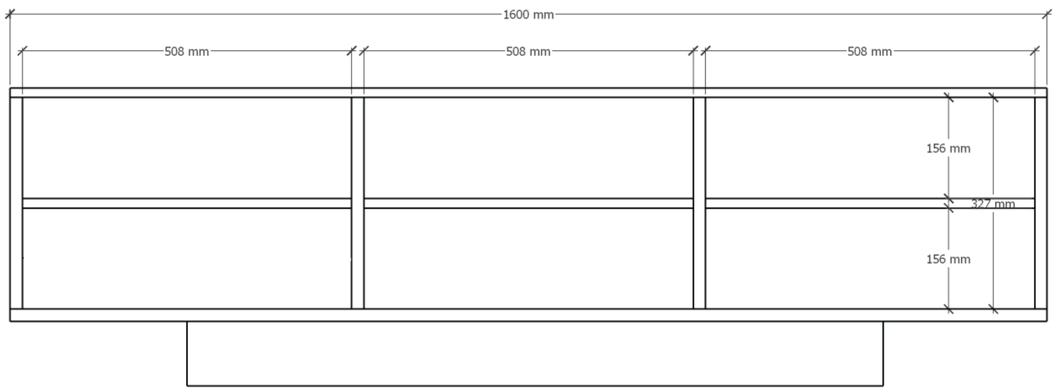

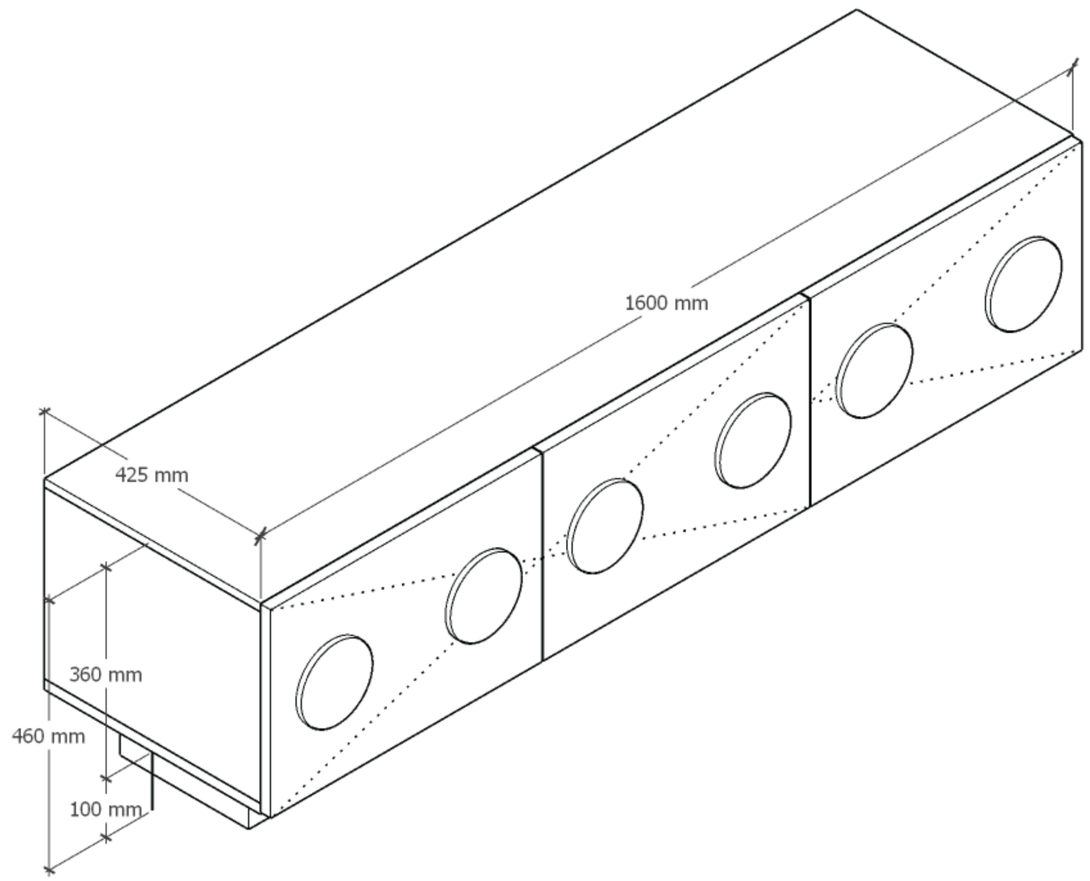

PASTFORM

FURNITURE