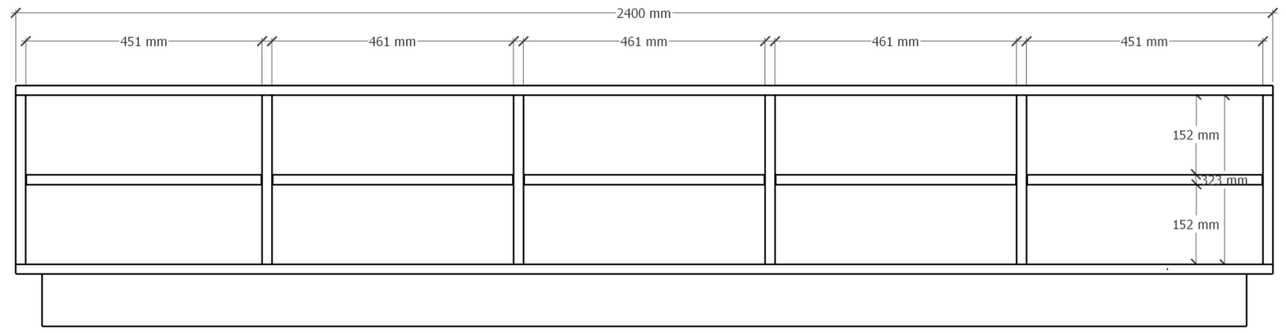

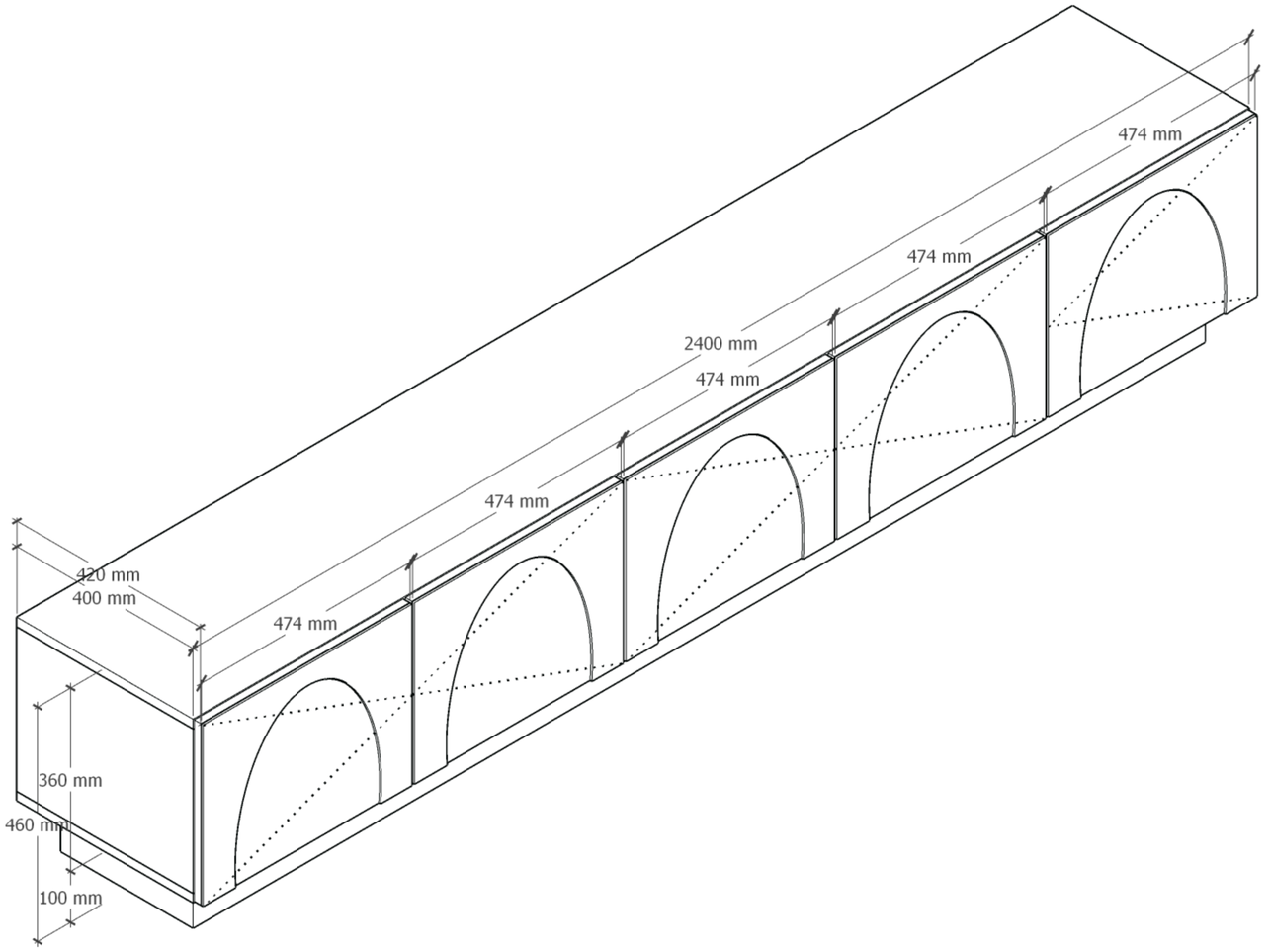

DASTFORM

FURNITURE